BXUV.H514 - Fire-resistance Ratings - ANSI/UL 263

Design/System/Construction/Assembly Usage Disclaimer

- Authorities Having Jurisdiction should be consulted in all cases as to the particular requirements covering the installation and use of UL Certified products, equipment, system, devices, and materials.
- Authorities Having Jurisdiction should be consulted before construction.
- Fire resistance assemblies and products are developed by the design submitter and have been investigated by UL for compliance with applicable requirements. The published information cannot always address every construction nuance encountered in the field.
- When field issues arise, it is recommended the first contact for assistance be the technical service staff provided by the product manufacturer noted for the design. Users of fire resistance assemblies are advised to consult the general Guide Information for each product category and each group of assemblies. The Guide Information includes specifics concerning alternate materials and alternate methods of construction.
- Only products which bear UL's Mark are considered Certified.

Fire-resistance Ratings - ANSI/UL 263

BXUV - Fire Resistance Ratings - ANSI/UL 263 Certified for United States
BXUV7 - Fire Resistance Ratings - CAN/ULC-S101 Certified for Canada

See General Information for Fire-resistance Ratings - ANSI/UL 263 Certified for United States
Design Criteria and Allowable Variances

See General Information for Fire Resistance Ratings - CAN/ULC-S101 Certified for Canada
Design Criteria and Allowable Variances

Design No. **H514**

February 28, 2023

Unrestrained Assembly Rating — 2 Hrs
This design was evaluated using a load design method other than the Limit States Design Method (e.g., Working Stress Design Method). For jurisdictions employing the Limit States Design Method, such as Canada, a load restriction factor shall be used — See Guide BXUV or BXUV7

*** Indicates such products shall bear the UL or cUL Certification Mark for jurisdictions employing the UL or cUL Certification (such as Canada), respectively.**

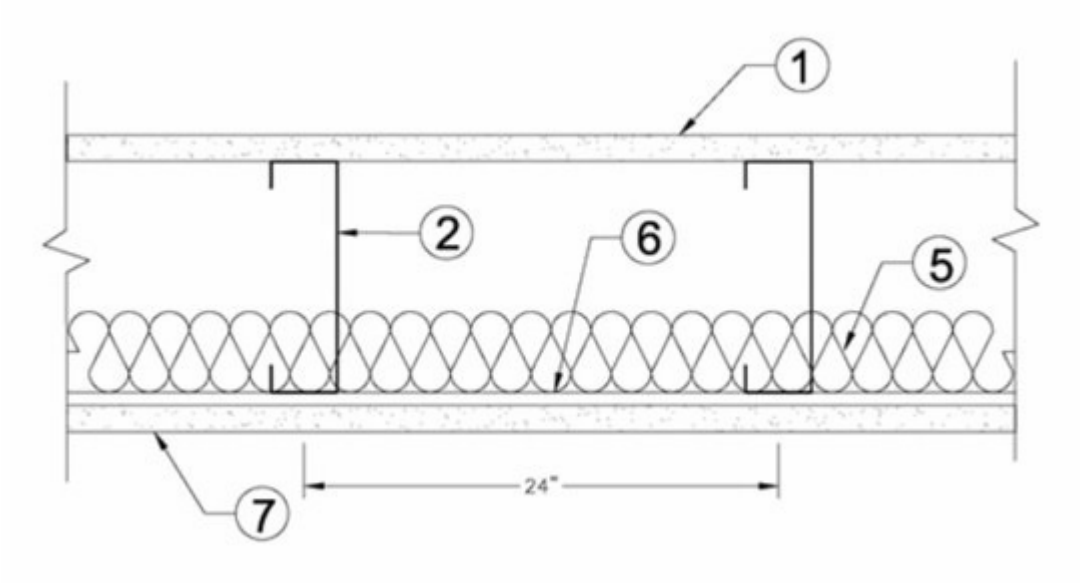

2 Hr Rating

1. **Flooring System - Building Units* —** Nom 3/4 in. thick, ship-lap or tongue-in-groove edge detail. Long dimension of boards to be perpendicular to joists with end joints staggered a min of 4 ft. and centered over the joists. Boards secured to steel joists with #8 x 1-5/8 in. long self-drilling, self-countersinking, steel cement board screws, Grabber GH8158LG spaced a max of 12 in. OC in the field and 8 in. OC along butt ends. Fasteners located 1/2 in. from butt edges and 2 in. from long edges of the board.
AMERIFORM L L C — Type Nocom

2. **Structural Steel Members — Joists —** C-shaped, galvanized steel section, min 10 in. deep with min 1-5/8 in. flanges and min 1/2 in. returns. Joists fabricated from min 16 MSG galv steel with Yield Strength of 50,000 psi. Joists spaced max 24 in. OC with center joists located 12 in. OC on either side of centerline.

2A. **Rim Track —** Not Shown - U-shaped, galvanized steel, min 10 in. deep with 2 in. legs. Where rim splices occur, rim tracks are connected using an overlapping section of a 19 in. long splice plate fabricated from a section of joist, with nine 3/4 in. long No. 10 self-drilling steel TEK screws to each rim piece.

2B. **Structural Steel Members —** Cold-formed, Min 16 MSG galvanized steel truss chord and web sections manufactured from steel conforming to ASTM A653 Grade 33 or higher yield strength. Steel thickness of truss chord and web sections as required by design to meet governing code requirements. Truss members connected together with No. 10-16 (min size) self-drilling screws or equivalent. Truss chord and web members to be designed in accordance with the American Iron and Steel Institute's Specification for the Design of Cold-Formed Steel Structural Members, 1996 Edition. Trusses spaced a max of 24 in. OC. Minimum truss depth 12.

2C. **Structural Steel Members* —** Pre-fabricated steel truss system consisting of chord and web sections fabricated from min 16 MSG cold-formed, galvanized steel. Min. depth 12 in. Trusses spaced a max of 24 in. OC.

KEYMARK ENTERPRISES L L C — KeyTruss system

2D. **Structural Steel Members* —** Pre-fabricated light gauge steel truss system consisting of cold-formed, galv steel chord and web sections. Minimum truss depth 12. Min 16 MSG. Trusses spaced a maximum of 24 in. OC.

AEGIS METAL FRAMING, DIV OF MITEK — Ultra-Span, Pre-fabricated Light Gauge Steel Truss System

TRUSSTEEL, DIV OF ITW BUILDING COMPONENTS INC — TrusSteel

2E. **Structural Steel Members* —** Pre-fabricated light gauge steel truss system consisting of cold-formed, galvanized steel cord and web sections. Trusses fabricated from min 16 MSG steel. Trusses minimum 12 in. deep, spaced a max of 24 in. OC.

DOUGLASS COLONY GROUP INC — Type FRAMECAD

3. **Joist Bridging —** Not Shown — Installed at the center of the joist span immediately after joists are installed and before construction loads are applied. Bridging consisting of cut-to-length joist sections (Item 2) placed between the joists with a max spacing of 8 ft. OC.

4. **Angle Clips —** Not Shown — 1-1/2 x 4 x 9-3/4 in. long, 16 MSG clips used to fasten joists to joist rim track. 4 in. side of clip placed against inside web of joists and 1-1/2 in. side placed against joist rim track. Each side secured with three #10-3/4 in. TEK screws.

4A. **Bridging Clips —** Not Shown - 1-1/2 x 4 x 8 in., 16 MSG clips used to fasten joist bridging. Clip is located on the web/flange side of the joist. Clip fastened with three #10-3/4 in. TEK screws per leg per clip.

4B. **Web Stiffeners —** Not Shown —Web stiffeners, min 3-5/8 in. wide with min 9/16 in. flange and min 1-1/4 in. flange, having the same depth as the joists. Fabricated from min 16 MSG galv steel. Secured to each joist on the non-flange side of the joist at support ends with four #10 by 3/4 in. long self-drilling screws.

5. **Batts and Blankets* —** 3-1/2 in. thick glass fiber batt insulation of nominal 0.92 pcf density, draped over the resilient channels (Item 6) or furring channels. Any glass fiber batt insulation bearing the UL Classification Marking for Surface Burning Characteristics or Fire Resistance may be used. See **Batts and Blankets** (BKNV) category in the Building Materials Directory or BZJZ in the Fire Resistance Directory for names of manufacturers.

6. **Resilient Channels —** Formed of No. 25 MSG galv steel, 1/2 in. deep, spaced max 12 in. OC, perpendicular to joists. Channel splices located beneath joists and overlapped 4 in. Channels secured to each joist with one 1/2 in. long Type S-12 low profile steel screw. Two additional channels spaced 6 in. OC, oriented opposite each gypsum board end joint. The additional channels shall extend min 12 in. beyond each side edge of board.

6A. **Steel Framing Members* —** (Optional - Not Shown) — As an alternate to Item 6, furring channels and Steel Framing Members* as described below:
a. **Furring Channels —** Formed of No. 25 MSG galv steel, 2-9/16 in. or 2-23/32 in. wide by 7/8 in. deep, spaced 12 in. OC perpendicular to joists Channels secured to joists as described in Item b. Ends of adjoining channels overlapped 6 in. and tied together with double strand of No. 18 SWG galv steel wire near each end of overlap.

b. **Steel Framing Members* —** Used to attach furring channels (Item a) to joists. Clips spaced 48 in. OC. RSIC-1 and RSIC-1 (2.75) clips secured to the bottom chord of alternating joists with No. 8 x 2-1/2 in. coarse drywall screw through the center grommet. RSIC-V and RSIC-V (2.75) clips secured to the bottom chord of alternating joists with No. 8 x 1-1/2 in. coarse drywall screw through the center hole. Furring channels are friction fitted into clips. RSIC-1 and RSIC-V clips for use with 2-9/16 in. wide furring channels. RSIC-1 (2.75) and RSIC-V (2.75) clips for use with 2-23/32 in. wide furring channels. Adjoining channels are overlapped as described in Item a. As an alternate, ends of adjoining channels may be overlapped 6 in. and secured together with two min 7/16 in. long No. 6 self-tapping framing screws, at the midpoint of the overlap, with one screw on each flange of the channel. Additional clips required to hold furring channel that supports the gypsum board butt joints, as described in Item 7.
PAC INTERNATIONAL L L C — Types RSIC-1, RSIC-V, RSIC-1 (2.75), RSIC-V (2.75)

6B. **Steel Framing Members* —** (Optional - Not Shown) — As an alternate to item 6, furring channels and Steel Framing Members* as described below.
a. **Furring Channels —** Formed of No. 25 MSG galv steel, 2-3/8 in. wide by 7/8 in deep, spaced 12 in OC, perpendicular to joists. Channels secured to joists as described in Item b. Ends of adjoining channels overlapped 6 in. and tied together with double strand of No. 18 SWG galv steel wire near each end of overlap. Additional channels shall be positioned so that the distance from the end of the board to the center of the first channel is 3 in. and from the board end to the center of the next channel is 12 in.

b. **Steel Framing Members* —** Used to attach furring channels (Item a) to the joists (Item 2). Clips spaced 48 in. OC., and secured to alternating joists with No. 8 x 2-1/2 in. coarse drywall screw through the center grommet. Furring channels are friction fitted into clips. Adjoining channels are overlapped as described in Item a. As an alternate, ends of adjoining channels may be overlapped 6 in. and secured together with two self-tapping No. 6 framing screws, min 7/16 in. long at the midpoint of the overlap, with one screw on each flange of the channel. Additional clips required to hold furring channel that supports the gypsum board butt joints, as described in Item 7.
PLITEQ INC — Type Genie Clip

6C. **Steel Framing Members* —** (Optional - Not Shown) - As an alternate to Item 6, furring channels and Steel Framing Members* as

described below.
a. **Furring Channels —** Formed of No. 25 MSG galv steel, 2-5/8 in. wide by 7/8 in deep, spaced 12 in OC, perpendicular to joists. Channels secured to joists as described in Item b.

b. **Steel Framing Members* —** Used to attach furring channels (Item a) to the joists (Item 2). Clips spaced at 48 in. OC and secured to the bottom of the joists with one 2 in. Coarse Drywall Screw with 1 in. diam washer through the center hole. Furring channels are then friction fitted into clips. Ends of channels are overlapped 6 in. and tied together with double strand of No. 18 AWG galvanized steel wire. Additional clips are required to hold the Gypsum Butt joints as described in Item 7.
STUDCO BUILDING SYSTEMS — RESILMOUNT Sound Isolation Clips - Type A237R

6D. **Steel Framing Members* —** (Optional - Not Shown) - As an alternate to Item 6, furring channels and Steel Framing Members* as described below.
a. **Furring Channels —** Formed of No. 25 MSG galv steel, 2-1/2 in. wide by 7/8 in deep, spaced 12 in OC, perpendicular to joists. Channels secured to joists as described in Item b.

b. **Steel Framing Members* —** Used to attach furring channels (Item a) to the joists (Item 2). Clips spaced at 48 in. OC and secured to the bottom of the joists with one 2-1/2 in. Coarse Drywall Screw with 1 in. diam washer through the center hole. Furring channels are then friction fitted into clips. Ends of channels are overlapped 6 in. and tied together with double strand of No. 18 AWG galvanized steel wire. Additional clips are required to hold the Gypsum Butt joints as described in Item 7.
REGUPOL AMERICA — Type SonusClip

6E. **Steel Framing Members* —** (Optional Not Shown) — As an alternate to Item 6, furring channels and Steel Framing Members* as described below:
a. **Furring Channels —** Formed of No. 25 MSG galv steel. 2-23/32 in. wide by 7/8 in. deep, spaced 12 in. OC perpendicular to joists. Channels secured to joists as described in Item b. Ends of adjoining channels overlapped 6 in. and tied together with double strand of No. 18 SWG galv steel wire near each end of overlap.

b. **Steel Framing Members* —** Used to attach furring channels (Item a) to joists. Clips spaced 48 in. OC., and secured to alternating joists with No. 8 x 2-1/2 in. coarse drywall screw through the center grommet. Furring channels are friction fitted into clips. Adjoining channels are overlapped as described in Item a. As an alternate, ends of adjoining channels may be overlapped 6 in. and secured together with two self-tapping No. 6 framing screws, min 7/16 in. long at the midpoint of the overlap, with one screw on each flange of the channel. Additional clips required to hold furring channel that supports the gypsum board butt joints, as described in Item 7.
CLARKDIETRICH BUILDING SYSTEMS — Type ClarkDietrich Sound Clip

6F. **Steel Framing Members* —** (Optional, Not Shown) — As an alternate to Item 6, furring channels and Steel Framing Members* as described below:
a. **Furring Channels —** Furring channels, 7/8 in. deep by 2-9/16 in. or 2-11/16 in. or 2-23/32 in. wide at the base and 1-7/16 in. wide at the face, formed from No. 25 ga galv steel, spaced 12 in. OC perpendicular to joists. Channels secured to joists with double strand of No. 18 SWG galv steel wire spaced 48 in. OC. Ends of adjoining channels overlapped 6 in. and tied together with double strand of No. 18 SWG galv steel wire near each end of overlap. Two furring channels used at end joints of gypsum board (Item 7), each extending a min of 6 in. beyond both side edges of the board.

b. **Steel Framing Members* —** Used as an alternate method to attach furring channels to joists. Clips spaced 48 in. OC., and secured to the bottom chord to alternating joists with two No. 8 x 2-1/2 in. coarse drywall screws, one through the hole at each end of the clip. Furring channels are friction fitted into clips. Ends of adjoining channels overlapped 6 in. and tied together with double strand of No. 18 SWG galv steel wire near each end of overlap. Additional clips required to hold furring channel that supports the gypsum board butt joints, as described in Item 7.
KINETICS NOISE CONTROL INC — Type Isomax

7. **Gypsum Board* —** Single layer of nom 5/8 in. thick, 48 in. wide gypsum panels installed with long dimension perpendicular to resilient channels. Butted end joints shall be staggered min. 6 ft and be centered over the resilient channels. Gypsum panels secured to resilient channels with 1 in. long Type S bugle-head screws spaced 8 in. OC in the field and end joints starting 1-1/2 in. and 4 in. from the side

joints. End joints secured to the two additional channels placed 3 in. from each side of the end joints.
NATIONAL GYPSUM CO — Type FSW-C

8. **Finishing System —** (Not Shown) Vinyl, dry or premixed joint compound, applied in two coats to joints and screw-heads. Nom 2 in. wide paper tape embedded in first layer of compound over all joints.

ALTERNATE CONSTRUCTION - 1 Hr Rating

6G. **Steel Framing Members* —** (Optional - Not Shown) — As an alternate to item 6 - 1 Hour Rating Only — Furring channels and Steel Framing Members* installed as described in item 6A except furring channels are spaced 24 in. OC. Two layers of gypsum board required as described in Item 7A.
PAC INTERNATIONAL L L C — Types RSIC-1, RSIC-1 (2.75).

6H. **Steel Framing Members* —** (Optional - Not Shown) — As an alternate to item 6 - 1 Hour Rating Only — furring channels and Steel Framing Members* installed as described in Item 6B except furring channels spaced 24 in. OC. Two layers of gypsum board required as described in Item 7A.
PLITEQ INC — Type Genie Clip

6I. **Steel Framing Members* —** (Optional - Not Shown) - As an alternate to item 6 - 1 Hour Rating Only — furring channels and Steel Framing Members* installed as described in Item 6C except furring channels spaced 24 in. OC. Two layers of gypsum board required as described in Item 7A.
STUDCO BUILDING SYSTEMS — Sound Isolation Clips - Type A237R

6J. **Steel Framing Members* —** (Optional - Not Shown) - As an alternate to item 6 - 1 Hour Rating Only — furring channels and Steel Framing Members* installed as described in Item 6D except furring channels spaced 24 in. OC. Two layers of gypsum board required as described in Item 7A.
REGUPOL AMERICA — Type SonusClip

6K. **Steel Framing Members* —** (Optional - Not Shown) — As an alternate to Item 6 - 1 Hour Rating Only - furring channels and Steel Framing Members* installed as described in Item 6E except furring channels spaced 24 in. OC. Two layers of gypsum board required as described in Item 7A.
CLARKDIETRICH BUILDING SYSTEMS — Type ClarkDietrich Sound Clip

6L. **Steel Framing Members* —** (Optional, Not Shown) — As an alternate to Item 6 - 1 Hour Rating Only - furring channels and Steel Framing Members* installed as described in Item 6F except furring channels spaced 24 in. OC. Two layers of gypsum board required as described in Item 7A.
KINETICS NOISE CONTROL INC — Type Isomax

7A. **Gypsum Board* —** (Required for the 1 Hour Rating and for use with items 6G through 6L) - Two layers of 5/8 in. thick by 4 ft wide gypsum panels, installed perpendicular to furring channels (Item 6Ga). The base layer of panels screw-attached to the furring channels with 1 in. long Type S screws spaced 8 in. OC at the butt joints and 16 in. OC in the field of the panel. At the base layer gypsum board butt joints, each end of each gypsum board shall be supported by a single length of furring channel equal to the width of the gypsum board plus 3 in. on each end. The two support furring channels shall be spaced approximately 3 in. in from joint. The face layer screw-attached to the furring channels with 1-5/8 in. Type S screws spaced 8 in. OC and 1-1/2 in. Type G screws spaced 8 in. OC at the butt joints located mid-span between furring channels. Gypsum board butted end joints in individual layers shall be staggered minimum 48 in. OC.
NATIONAL GYPSUM CO — Type FSW-C

*** Indicates such products shall bear the UL or cUL Certification Mark for jurisdictions employing the UL or cUL Certification (such as Canada), respectively.**

Last Updated on 2023-02-28

The appearance of a company's name or product in this database does not in itself assure that products so identified have been manufactured under UL Solutions' Follow - Up Service. Only those products bearing the UL Mark should be considered to be Certified and covered under UL Solutions' Follow - Up Service. Always look for the Mark on the product.

UL Solutions permits the reproduction of the material contained in Product iQ subject to the following conditions: 1. The Guide Information, Assemblies, Constructions, Designs, Systems, and/or Certifications (files) must be presented in their entirety and in a non-misleading manner, without any manipulation of the data (or drawings). 2. The statement "Reprinted from Product iQ with permission from UL Solutions" must appear adjacent to the extracted material. In addition, the reprinted material must include a copyright notice in the following format: "©2023 UL LLC."